UNIVERSITY OF CAMBRIDGE INTERNATIONAL EXAMINATIONS
General Certificate of Education
Advanced Subsidiary Level and Advanced Level

CANDIDATE NAME									
CENTRE NUMBER						CANDIDATE NUMBER				

3818885284

PHYSICS **9702/31**

Advanced Practical Skills 1 **October/November 2011**

2 hours

Candidates answer on the Question Paper.

Additional Materials: As listed in the Confidential Instructions.

READ THESE INSTRUCTIONS FIRST

Write your Centre number, candidate number and name on all work you hand in.
Write in dark blue or black pen.
You may use a soft pencil for any diagrams, graphs or rough working.
Do not use staples, paper clips, highlighters, glue or correction fluid.
DO **NOT** WRITE IN ANY BARCODES.

Answer **both** questions.
You will be allowed to work with the apparatus for a maximum of one hour for each question.
You are expected to record all your observations as soon as these observations are made, and to plan the presentation of the records so that it is not necessary to make a fair copy of them.
You may lose marks if you do not show your working or if you do not use appropriate units.

Additional answer paper and graph paper should be used only if it becomes necessary to do so.
You are reminded of the need for good English and clear presentation in your answers.

At the end of the examination, fasten all your work securely together.
The number of marks is given in brackets [ ] at the end of each question or part question.

For Examiner's Use	
1	
2	
Total	

This document consists of **12** printed pages.

© UCLES 2011

You may not need to use all of the materials provided.

For Examiner's Use

1 In this experiment you will investigate the equilibrium position of a metre rule with a mass attached to one end.

(a) (i) Use a loop of string to balance the metre rule as shown in Fig. 1.1.

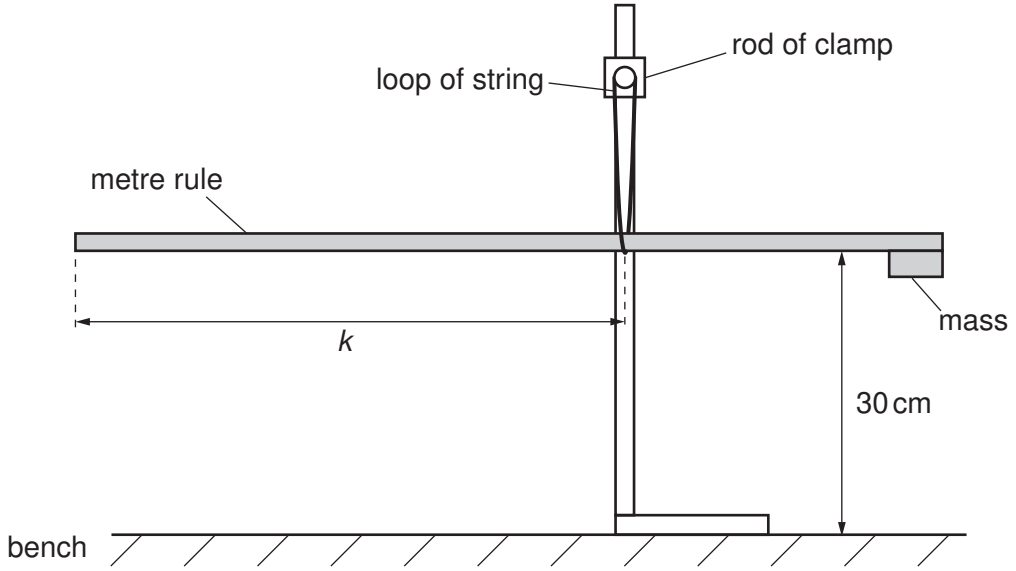

Fig. 1.1

(ii) Measure and record distance *k* between the loop and the end of the rule as shown in Fig. 1.1.

k = ... cm [1]

(b) (i) Use the other loop of string to attach the mass hanger at a distance d from the end of the rule as shown in Fig. 1.2. The value of d should be approximately 5 cm.

For Examiner's Use

(ii) For this value of d, adjust the position of the rule so that it balances.
The new distance between the first loop and the end of the rule is D, as shown in Fig. 1.2.

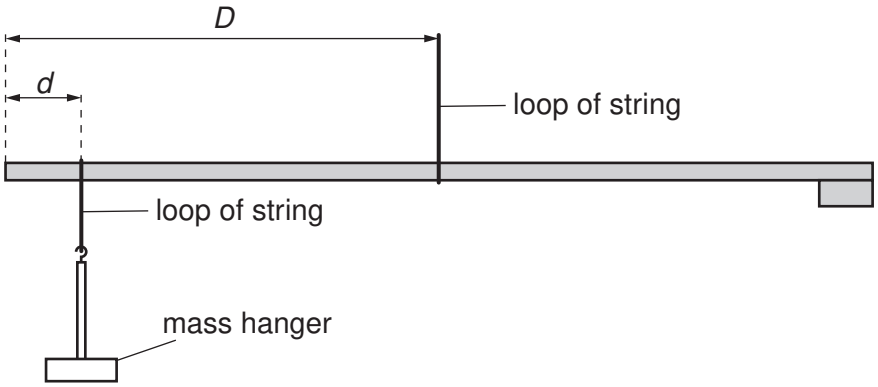

Fig. 1.2

(iii) Measure and record lengths d and D.

d = ...

D = ...
[1]

(iv) Calculate the value of $\frac{(D-d)}{D}$.

$\frac{(D-d)}{D}$ = ...

(c) By moving the mass hanger along the metre rule, repeat **(b)(ii)**, **(b)(iii)** and **(b)(iv)** until you have six sets of values of d and D.
Include values of $\frac{1}{D}$ and $\frac{(D-d)}{D}$ in your table.

For Examiner's Use

[10]

(d) (i) Plot a graph of $\frac{(D-d)}{D}$ on the y-axis against $\frac{1}{D}$ on the x-axis. [3]

(ii) Draw the straight line of best fit. [1]

(iii) Determine the gradient and y-intercept of this line.

gradient = ...

y-intercept = ...
[2]

© UCLES 2011

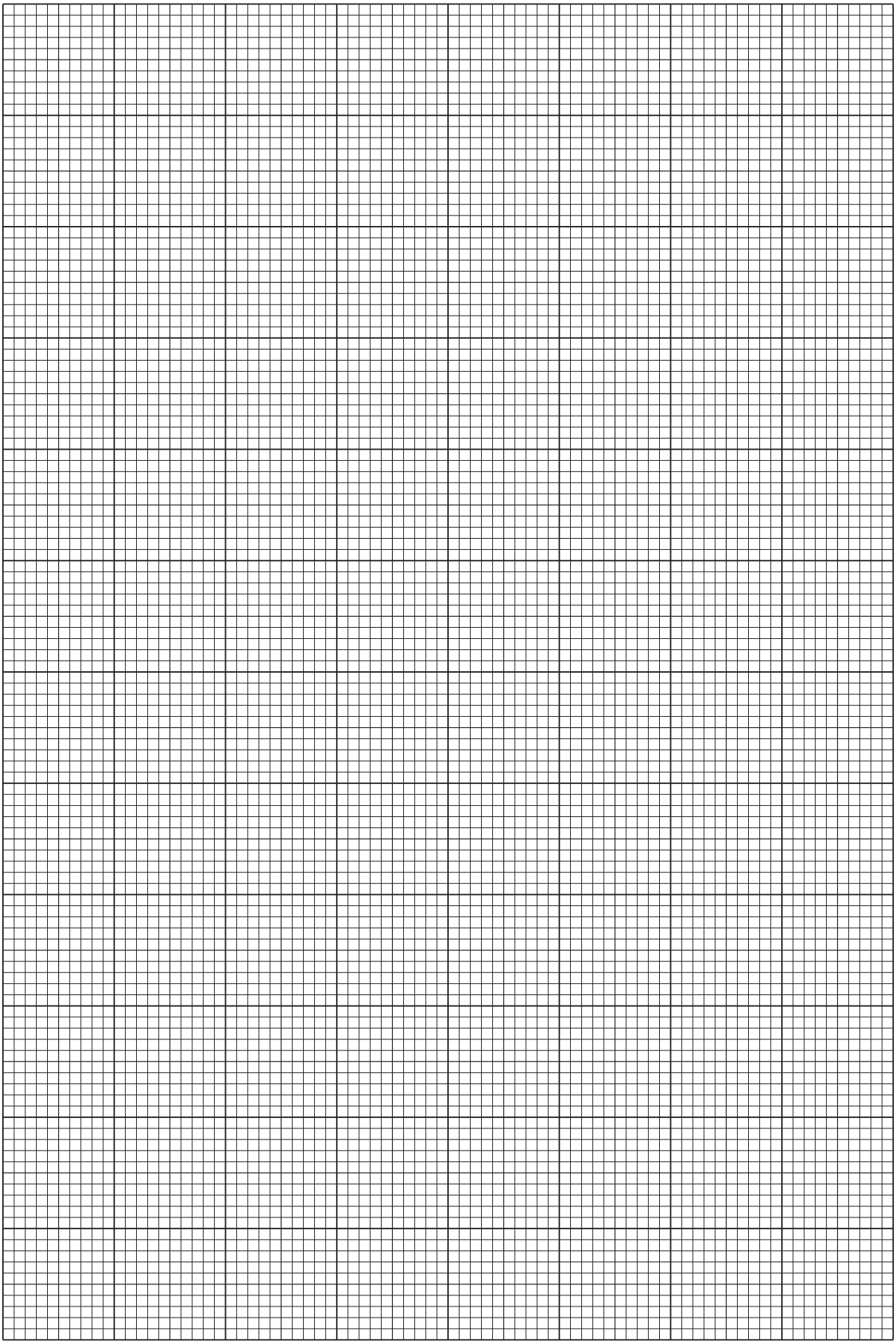

For Examiner's Use

(e) The quantities d and D are related by the equation

$$\frac{(D-d)}{D} = \frac{A}{D} - B$$

where A and B are constants.

Use your answers in **(d)(iii)** to determine the value of $\frac{A}{B}$.
Give appropriate units.

For Examiner's Use

$\frac{A}{B}$ = ...[2]

You may not need to use all of the materials provided.

For Examiner's Use

2 In this experiment you will investigate how the motion of a thin card shape depends on its size.

You have been provided with two identical strips of card. Spare strips are available if necessary.

(a) Measure and record the thickness t of one of the strips of card.

t = ... mm [1]

(b) (i) Measure and record the length L of the same strip of card as shown in Fig. 2.1.



Fig. 2.1

L = ... [1]

(ii) Estimate the percentage uncertainty in your value of L.

percentage uncertainty = ... [1]

(c) (i) Measure and record the width w of the same strip as shown in Fig. 2.1.

w = ...

(ii) Determine the volume V of the strip, using the equation

$$V = t\,L\,w$$

For Examiner's Use

$V =$ ..... [1]

(d) (i) Use tape to stick the two strips together, so that they do not overlap, to make the shape shown in Fig. 2.2.

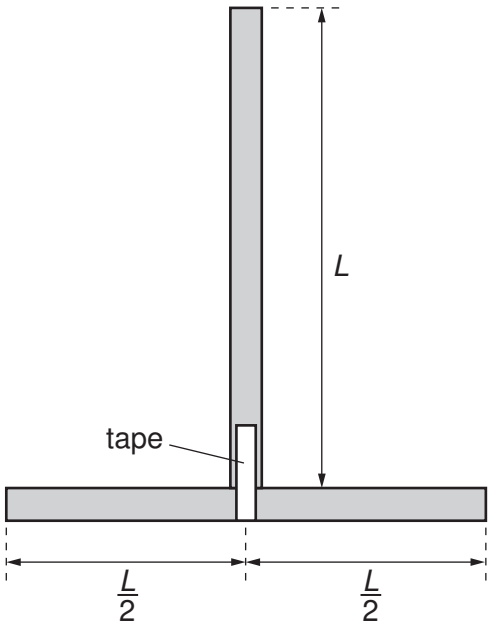

Fig. 2.2

(ii) Use the pin to make a hole at the top of the vertical strip as shown in Fig. 2.3.

For Examiner's Use

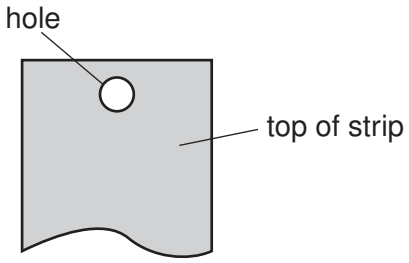

Fig. 2.3

The hole should be central and as near to the top as possible and be large enough for the card to swing freely on the pin.

(iii) Using the cork and pin, suspend the card shape as shown in Fig. 2.4.

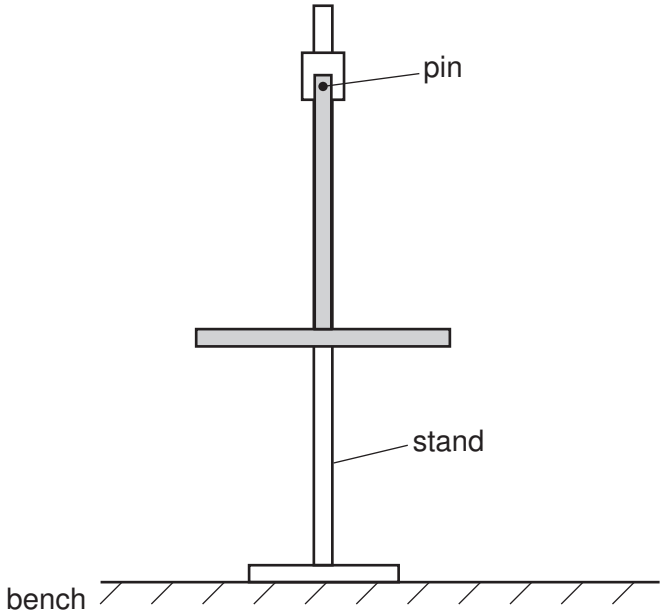

Fig. 2.4

(e) Move the card shape to the left. Release the shape and watch its movement.
The shape will move to the right and then to the left again, completing a swing as shown in Fig. 2.5.

For Examiner's Use

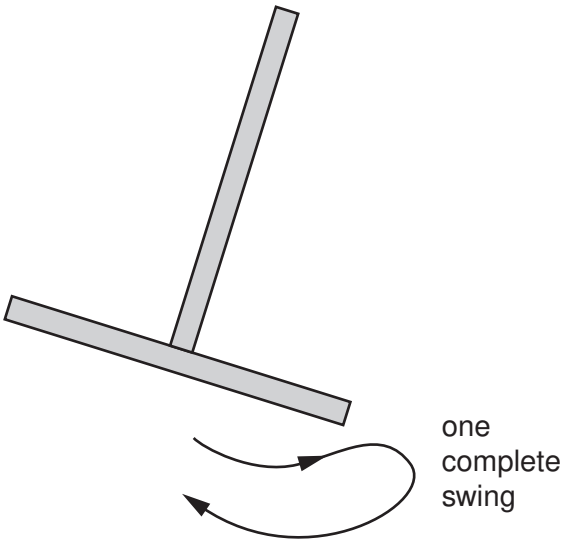

Fig. 2.5

The time taken for one complete swing is T.
By timing several of these complete swings, determine an accurate value for T.

T = ...[2]

(f) Cut both strips so that L is approximately 10 cm, as shown in Fig. 2.6.

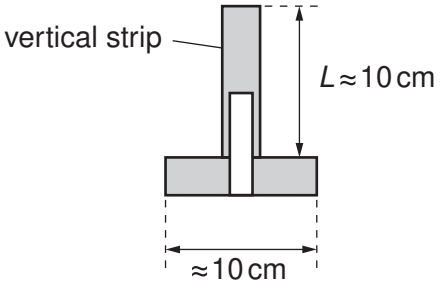

Fig. 2.6

Measure and record the length L of the vertical strip.

L = ...[1]

(g) Repeat **(d)(ii)**, **(d)(iii)** and **(e)** for this new shape.

For Examiner's Use

$T =$ .....[2]

(h) It is suggested that the relationship between T and L for this shape is

$$T^2 = k\,L$$

where k is a constant.

(i) Using your data, calculate two values of k.

first value of $k =$ .....

second value of $k =$ .....
[1]

(ii) Justify the number of significant figures that you have given for your values of k.

.....

.....

.....[1]

(iii) Explain whether your results support the suggested relationship.

.....

.....

.....

.....[1]

(i) **(i)** Describe four sources of uncertainty or limitations of the procedure for this experiment.

For Examiner's Use

1 .....

.....

2 .....

.....

3 .....

.....

4 .....

.....

[4]

(ii) Describe four improvements that could be made to this experiment. You may suggest the use of other apparatus or different procedures.

1 .....

.....

2 .....

.....

3 .....

.....

4 .....

.....

[4]

Permission to reproduce items where third-party owned material protected by copyright is included has been sought and cleared where possible. Every reasonable effort has been made by the publisher (UCLES) to trace copyright holders, but if any items requiring clearance have unwittingly been included, the publisher will be pleased to make amends at the earliest possible opportunity.

University of Cambridge International Examinations is part of the Cambridge Assessment Group. Cambridge Assessment is the brand name of University of Cambridge Local Examinations Syndicate (UCLES), which is itself a department of the University of Cambridge.